Magnus
sink range

India's No. 1
NIRALI BG
STAINLESS STEEL KITCHEN SINKS

Maxus

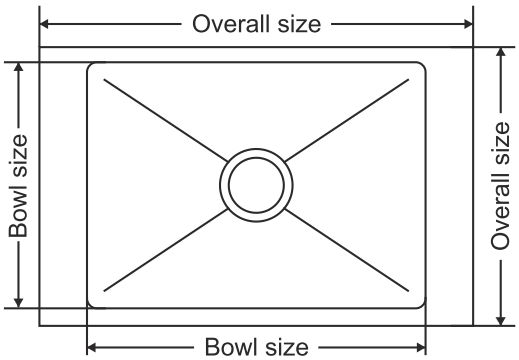

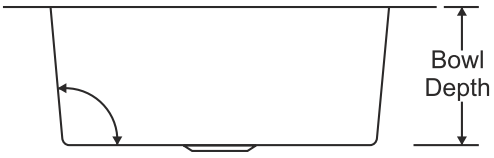

Overall Size	Bowl Size
Big 710 mm x 460 mm 28 inch x 18 inch	560 x 410 x 230 mm 22 x 16 x 9 inch
Small 635 mm x 460 mm 25 inch x 18 inch	485 x 410 x 230 mm 19 x 16 x 9 inch

Finishes

Glossy ☒	Satin ☒	Hairline Satin ☑	Anti-scratch ☒

Trust Nirali BG to be on top of innovation. Perfected with precision engineering, the Magnus range has value added features that makes the range one-of-a-kind. Specially designed edges to provide extra space for perfect utility & elegant look on the platform. 9" deep bowl to handle large vessels. A narrow slope and tapered side walls for easy cleaning.

Magnus Range Features

- Better look & utility
- AISI 304 Quality
- Hairline Satin Finish
- Bigger Deeper Bowl
- 1.2 mm Thick

Magnus range sinks are available in plain border only.

Magnus range sink-bowl have tapered side walls.

Mfg. & Marketed by: Jyoti Kitchen Industries Pvt. Ltd., Mumbai under License. **Nirali BG Trademark Owner:** Jyoti (India) Metal Industries Pvt. Ltd.